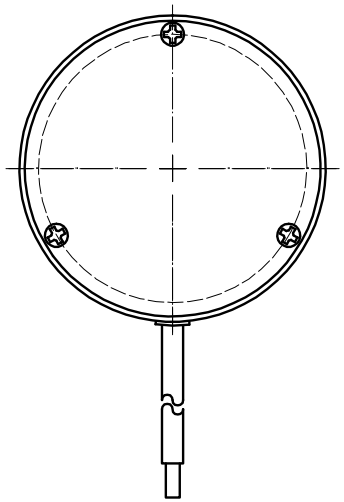

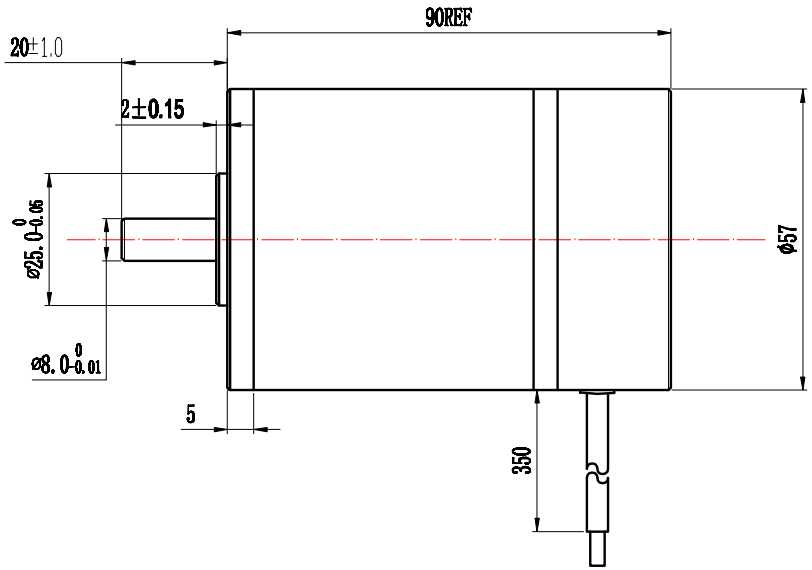

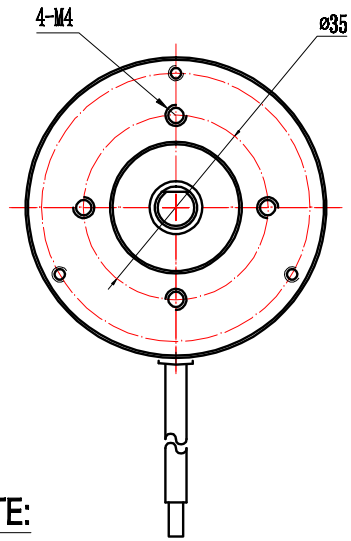

Power Lead Wires UL1332, AWG 18#		Speed Control Wires UL1332, AWG 24#		
RED	BLACK	GREEN	BLUE	YELLOW
+24 VDC	GND	0 - 5 VDC	For connecting with the rheostat	

NOTE:

[1] BLDC MOTOR WITH HALL SENSORS

[2] DRIVER: WITH IN

[3] HALL SENSOR: ELECTRIC ANGLE 120°, TEMP. ENDURANCE 120°C

[4] FINISH: POWDER COATING, DULL BLACK

[5] DUTY CYCLE: CONTINUOUS

[6] ROTATION: CCW VIEWED FROM FRONT COVER OF THE MOTOR

[7] ALL COMPONENT TO BE COMPLIANT TO ROHS

ELECTRICAL PERFORMANCE

VOLTAGE 24VDC	TORQUE N-CM	SPEED RPM (±10%)	CURRENT A	POWER Wo	EFFCY %
FREE LOAD SPEED	0.0	4500	0.8	0	0%
NORMAL LOAD	25	3600	5.0	92	76%
@MAX EFFICIENCY	18.1	3735	4.1	75	76%
@MAX POWER	56.2	2250	10.2	133	54%
@STALL	112.5	0	19.7	0	0

HIPOT: Ic I 600 Vac/10mA/1sec

INSULATION RESISTANCE: 10.0 MΩ MIN

INSULATION CLASS: F

GENERAL FEATURES

Lead wire UL1332 200℃ AWG#18

	LENGTH	STRIP LENGTH	COLOR
W1	300+15/0	5±1	
W2	300+15/0	5±1	
W3	300+15/0	5±1	

[1] FINISH: POWDER CAOTING,DULL BLACK

REV.	ENINEERING CHANG DESCRIPTION	ECN#	INPUT	APRVL	DATE

CUSTOMER APPROVAL

APPROVAL:

DATE:

UNSPECIFIED TOLERANCE

DECIMAL 1 PLACE	DECIMAL 2 PLACE	ANGLE
±0.25	±0.05	±1°
DESIGNED		
DRAWN		
CHECKED		
APPROVED		

REV.	A
MODEL NO	BY57BL90

BY BLDC MOTOR

scale: 1 : 1

QTY PER UNIT: MM

SHEET 1 OF 1

DRAWING NO: